Cambridge Assessment International Education

Cambridge International AS & A Level

CANDIDATE NAME

CENTRE NUMBER

CANDIDATE NUMBER

8391322538

PHYSICS **9702/21**

Paper 2 AS Level Structured Questions **May/June 2020**

1 hour 15 minutes

You must answer on the question paper.

No additional materials are needed.

INSTRUCTIONS

- Answer **all** questions.
- Use a black or dark blue pen. You may use an HB pencil for any diagrams or graphs.
- Write your name, centre number and candidate number in the boxes at the top of the page.
- Write your answer to each question in the space provided.
- Do **not** use an erasable pen or correction fluid.
- Do **not** write on any bar codes.
- You may use a calculator.
- You should show all your working and use appropriate units.

INFORMATION

- The total mark for this paper is 60.
- The number of marks for each question or part question is shown in brackets [ ].

This document has **16** pages. Blank pages are indicated.

© UCLES 2020

Data

speed of light in free space	$c = 3.00 \times 10^{8}\,\text{m s}^{-1}$
permeability of free space	$\mu_0 = 4\pi \times 10^{-7}\,\text{H m}^{-1}$
permittivity of free space	$\varepsilon_0 = 8.85 \times 10^{-12}\,\text{F m}^{-1}$
	$(\frac{1}{4\pi\varepsilon_0} = 8.99 \times 10^{9}\,\text{m F}^{-1})$
elementary charge	$e = 1.60 \times 10^{-19}\,\text{C}$
the Planck constant	$h = 6.63 \times 10^{-34}\,\text{J s}$
unified atomic mass unit	$1\,\text{u} = 1.66 \times 10^{-27}\,\text{kg}$
rest mass of electron	$m_e = 9.11 \times 10^{-31}\,\text{kg}$
rest mass of proton	$m_p = 1.67 \times 10^{-27}\,\text{kg}$
molar gas constant	$R = 8.31\,\text{J K}^{-1}\,\text{mol}^{-1}$
the Avogadro constant	$N_A = 6.02 \times 10^{23}\,\text{mol}^{-1}$
the Boltzmann constant	$k = 1.38 \times 10^{-23}\,\text{J K}^{-1}$
gravitational constant	$G = 6.67 \times 10^{-11}\,\text{N m}^2\,\text{kg}^{-2}$
acceleration of free fall	$g = 9.81\,\text{m s}^{-2}$

© UCLES 2020

Formulae

uniformly accelerated motion	$s = ut + \frac{1}{2}at^2$ $v^2 = u^2 + 2as$
work done on/by a gas	$W = p\Delta V$
gravitational potential	$\phi = -\frac{Gm}{r}$
hydrostatic pressure	$p = \rho gh$
pressure of an ideal gas	$p = \frac{1}{3}\frac{Nm}{V}\langle c^2 \rangle$
simple harmonic motion	$a = -\omega^2 x$
velocity of particle in s.h.m.	$v = v_0 \cos \omega t$ $v = \pm \omega\sqrt{(x_0^2 - x^2)}$
Doppler effect	$f_o = \frac{f_s v}{v \pm v_s}$
electric potential	$V = \frac{Q}{4\pi\varepsilon_0 r}$
capacitors in series	$1/C = 1/C_1 + 1/C_2 + \ldots$
capacitors in parallel	$C = C_1 + C_2 + \ldots$
energy of charged capacitor	$W = \frac{1}{2}QV$
electric current	$I = Anvq$
resistors in series	$R = R_1 + R_2 + \ldots$
resistors in parallel	$1/R = 1/R_1 + 1/R_2 + \ldots$
Hall voltage	$V_H = \frac{BI}{ntq}$
alternating current/voltage	$x = x_0 \sin \omega t$
radioactive decay	$x = x_0 \exp(-\lambda t)$
decay constant	$\lambda = \frac{0.693}{t_{\frac{1}{2}}}$

© UCLES 2020

[Turn over

BLANK PAGE

© UCLES 2020

Answer **all** the questions in the spaces provided.

1 **(a)** Use an expression for work done, in terms of force, to show that the SI base units of energy are $kg\,m^2\,s^{-2}$.

[2]

(b) **(i)** The energy E stored in an electrical component is given by

$$E = \frac{Q^2}{2C}$$

where Q is charge and C is a constant.

Use this equation and the information in **(a)** to determine the SI base units of C.

SI base units ..... [2]

(ii) Measurements of a constant current in a wire are taken using an analogue ammeter.

For these measurements, describe one possible cause of:

1. a random error

.....

.....

2. a systematic error.

.....

.....

[2]

[Total: 6]

2 **(a)** State Newton's second law of motion.

.....

..... [1]

(b) A delivery company suggests using a remote-controlled aircraft to drop a parcel into the garden of a customer. When the aircraft is vertically above point P on the ground, it releases the parcel with a velocity that is horizontal and of magnitude $5.4\,m\,s^{-1}$. The path of the parcel is shown in Fig. 2.1.

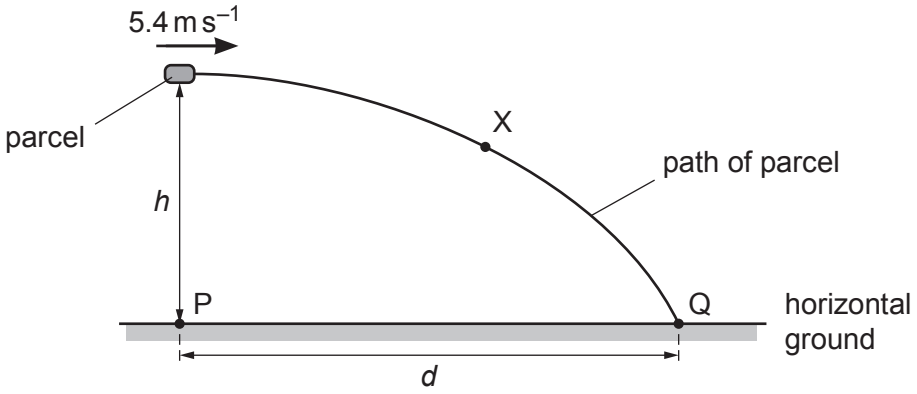

Fig. 2.1 (not to scale)

The parcel takes a time of 0.81 s after its release to reach point Q on the horizontal ground. Assume air resistance is negligible.

(i) On Fig. 2.1, draw an arrow from point X to show the direction of the acceleration of the parcel when it is at that point. [1]

(ii) Determine the height *h* of the parcel above the ground when it is released.

h = ... m [2]

(iii) Calculate the horizontal distance *d* between points P and Q.

d = ... m [1]

© UCLES 2020

(c) Another parcel is accidentally released from rest by a different aircraft when it is hovering at a great height above the ground. Air resistance is now significant.

(i) On Fig. 2.2, draw arrows to show the directions of the forces acting on the parcel as it falls vertically downwards. Label each arrow with the name of the force.

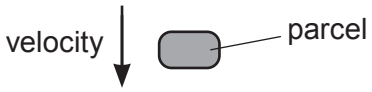

Fig. 2.2

[2]

(ii) By considering the forces acting on the parcel, state and explain the variation, if any, of the acceleration of the parcel as it moves downwards before it reaches constant (terminal) speed.

.....

.....

.....

.....

.....

..... [3]

(iii) Describe the energy conversion that occurs when the parcel is falling through the air at constant (terminal) speed.

.....

..... [1]

[Total: 11]

3 **(a)** State **two** conditions for an object to be in equilibrium.

1. .....

.....

2. .....

.....

[2]

(b) A sphere of weight 2.4 N is suspended by a wire from a fixed point P. A horizontal string is used to hold the sphere in equilibrium with the wire at an angle of 53° to the horizontal, as shown in Fig. 3.1.

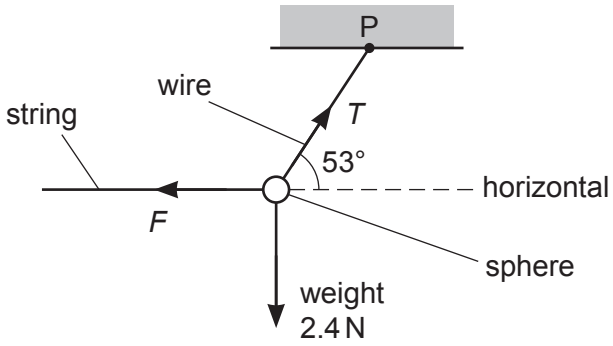

Fig. 3.1 (not to scale)

(i) Calculate:

1. the tension *T* in the wire

T = ... N

2. the force *F* exerted by the string on the sphere.

F = ... N

[2]

(ii) The wire has a circular cross-section of diameter 0.50 mm. Determine the stress σ in the wire.

σ = ... Pa [3]

© UCLES 2020

(c) The string is disconnected from the sphere in **(b)**. The sphere then swings from its initial rest position A, as illustrated in Fig. 3.2.

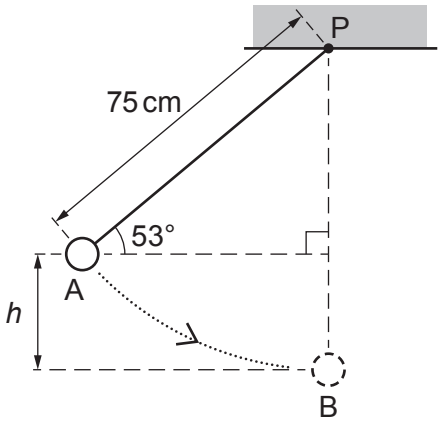

Fig. 3.2 (not to scale)

The sphere reaches maximum speed when it is at the bottom of the swing at position B. The distance between P and the centre of the sphere is 75 cm.
Air resistance is negligible and energy losses at P are negligible.

(i) Show that the vertical distance *h* between A and B is 15 cm.

[1]

(ii) Calculate the change in gravitational potential energy of the sphere as it moves from A to B.

change in gravitational potential energy = ... J [2]

(iii) Use your answer in **(c)(ii)** to determine the speed of the sphere at B.
Show your working.

speed = ... $m\,s^{-1}$ [3]

[Total: 13]

4 **(a)** **(i)** By reference to the direction of propagation of energy, state what is meant by a *longitudinal* wave.

.....

..... [1]

(ii) State the principle of superposition.

.....

.....

..... [2]

(b) The wavelength of light from a laser is determined using the apparatus shown in Fig. 4.1.

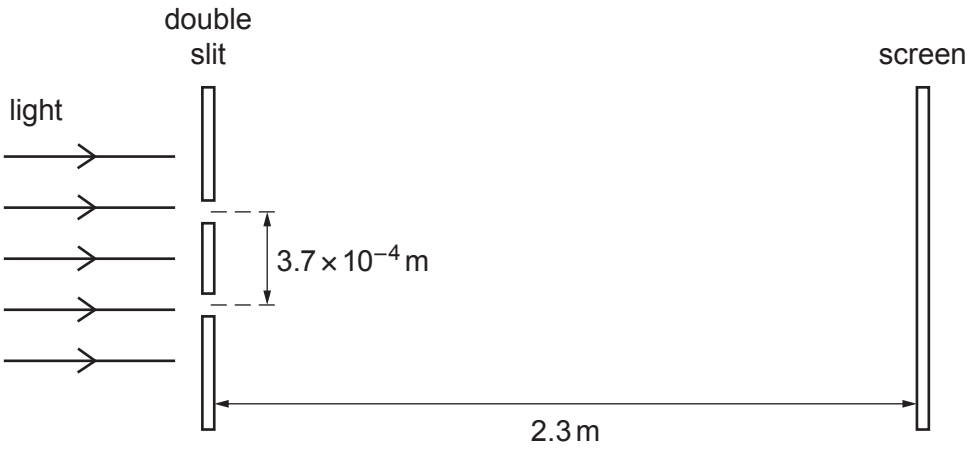

Fig. 4.1 (not to scale)

The light from the laser is incident normally on the plane of the double slit.
The separation of the two slits is 3.7×10^{-4} m. The screen is parallel to the plane of the double slit. The distance between the screen and the double slit is 2.3 m.

A pattern of bright fringes and dark fringes is seen on the screen. The separation of adjacent bright fringes on the screen is 4.3×10^{-3} m.

(i) Calculate the wavelength, in nm, of the light.

wavelength = ... nm [3]

© UCLES 2020

(ii) The intensity of the light passing through each slit was initially the same. The intensity of the light through **one** of the slits is now reduced.

Compare the appearance of the fringes before and after the change of intensity.

.....

.....

.....

..... [2]

[Total: 8]

5 **(a)** Metal wire is used to connect a power supply to a lamp. The wire has a total resistance of 3.4 Ω and the metal has a resistivity of 2.6×10^{-8} Ωm. The total length of the wire is 59 m.

(i) Show that the wire has a cross-sectional area of 4.5×10^{-7} m^2.

[2]

(ii) The potential difference across the total length of wire is 1.8 V.

Calculate the current in the wire.

current = ... A [1]

(iii) The number density of the free electrons in the wire is 6.1×10^{28} m^{-3}.

Calculate the average drift speed of the free electrons in the wire.

average drift speed = ... $m\,s^{-1}$ [2]

(b) A different wire carries a current. This wire has a part that is thinner than the rest of the wire, as shown in Fig. 5.1.

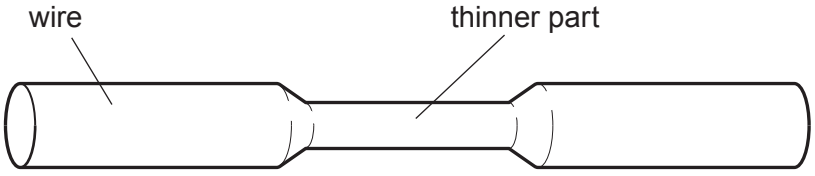

Fig. 5.1

© UCLES 2020

(i) State and explain qualitatively how the average drift speed of the free electrons in the thinner part compares with that in the rest of the wire.

.....

.....

..... [2]

(ii) State and explain whether the power dissipated in the thinner part is the same, less or more than the power dissipated in an equal length of the rest of the wire.

.....

.....

..... [2]

(c) Three resistors have resistances of 180 Ω, 90 Ω and 30 Ω.

(i) Sketch a diagram showing how **two** of these three resistors may be connected together to give a combined resistance of 60 Ω between the terminals shown.
Ensure you label the values of the resistances in your diagram.



[1]

(ii) A potential divider circuit is produced by connecting the three resistors to a battery of electromotive force (e.m.f.) 12 V and negligible internal resistance. The potential divider circuit provides an output potential difference V_{OUT} of 8.0 V.
Fig. 5.2 shows the circuit diagram.

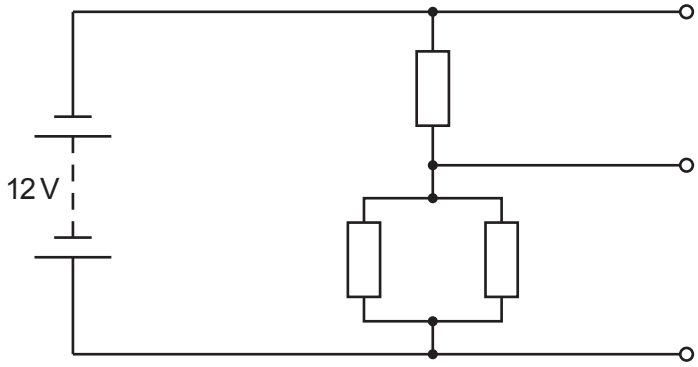

Fig. 5.2

On Fig. 5.2, label the resistances of all three resistors and the potential difference V_{OUT}. [2]

[Total: 12]

6 **(a)** Two horizontal metal plates are separated by a distance of 2.0 cm in a vacuum, as shown in Fig. 6.1.

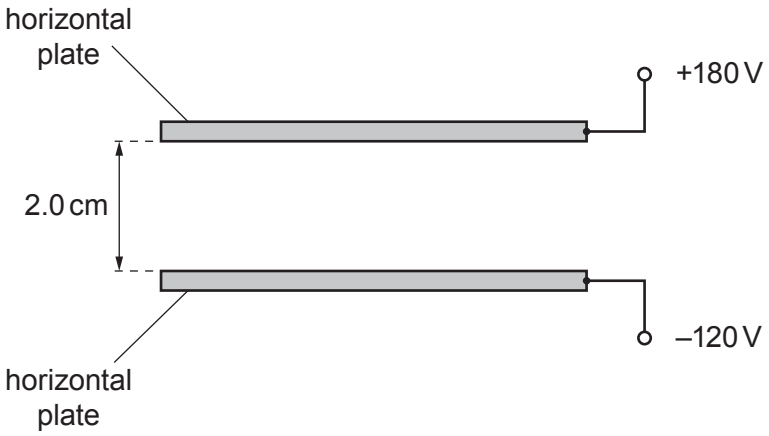

Fig. 6.1

The top plate has an electric potential of +180 V and the bottom plate has an electric potential of –120 V.

(i) Determine the magnitude of the electric field strength between the plates.

electric field strength = ... $N C^{-1}$ [2]

(ii) State the direction of the electric field.

..... [1]

(b) An uncharged atom of uranium-238 ($^{238}_{92}U$) has a change made to its number of orbital electrons. This causes the atom to change into a new particle (ion) X that has an overall charge of +2*e*, where *e* is the elementary charge.

(i) Determine the number of protons, neutrons and electrons in the particle (ion) X.

number of protons = ...

number of neutrons = ...

number of electrons = ...
[3]

(ii) The particle (ion) X is in the electric field in **(a)** at a point midway between the plates.

Determine the magnitude of the electric force acting on X.

force = ... N [2]

(iii) The nucleus of uranium-238 ($^{238}_{92}$U) decays in stages, by emitting α-particles and β^- particles, to form a nucleus of thorium-230 ($^{230}_{90}$Th).

Calculate the total number of α-particles and the total number of β^- particles that are emitted during the decay of uranium-238 to thorium-230.

number of α-particles = ...

number of β^- particles = ...
[2]

[Total: 10]

© UCLES 2020

BLANK PAGE

Permission to reproduce items where third-party owned material protected by copyright is included has been sought and cleared where possible. Every reasonable effort has been made by the publisher (UCLES) to trace copyright holders, but if any items requiring clearance have unwittingly been included, the publisher will be pleased to make amends at the earliest possible opportunity.

To avoid the issue of disclosure of answer-related information to candidates, all copyright acknowledgements are reproduced online in the Cambridge Assessment International Education Copyright Acknowledgements Booklet. This is produced for each series of examinations and is freely available to download at www.cambridgeinternational.org after the live examination series.

Cambridge Assessment International Education is part of the Cambridge Assessment Group. Cambridge Assessment is the brand name of the University of Cambridge Local Examinations Syndicate (UCLES), which itself is a department of the University of Cambridge.

© UCLES 2020